SAROPACK future-packed solutions



Flow pack FW

Film packaging for high output

Our product range offers flexible solutions for (almost) every application and industry. You benefit from fast availability – as well as our expertise and customised advice, both of which are part of every optimum packaging solution.



San Giovanni Bianco, Province of Bergamo, Italy

The production site in northern Italy has been a leader in the production of state-of-the-art packaging machines for many years. This is where we employ series-production solutions and also develop and manufacture customised accessories tailored to your specific needs.

Flow pack machines

The SaroPacker flow pack machines offer fast and precise packaging of products such as fruit, vegetables, baked goods or any other products that need to be packed in a film bag. With automated processes and precise control, they maximise the efficiency of your packaging process. The compact design ensures an attractive presentation and optimum protection for your products.



Rotating sealing system

Page 04



Vertical cycled sealing system

Page 10



Vertical continuous sealing system

Page 14

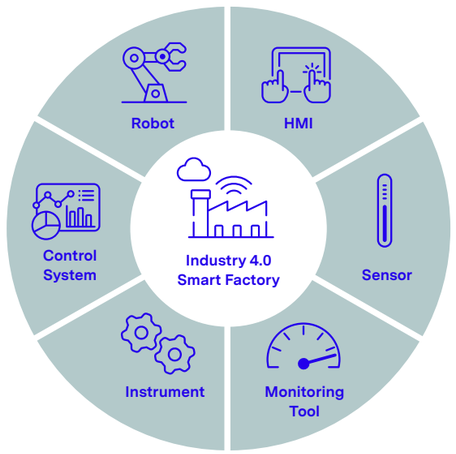

Industry 4.0 and IoT technology platform

4.0 ready

The SaroPacker FW series was developed on the basis of the Industry 4.0 and IoT (Internet of Things) technology platforms. These technologies form the foundation for all model variants and enable intelligent, networked and automated packaging processes.

04

Rotating sealing system

The models with rotating sealing jaws are used to pack a wide range of products with small dimensions and irregular shapes, whereby these products are sent into the machine either individually or already grouped.

- The products are packaged at a speed of up to 200 cycles per minute.
- The system for forming and sealing the film bag in combination with the specially developed dynamic forming shoulder enables the fast and flexible set-up of the packaging process.
- Innovative and versatile technical options ensure low production costs.
- Machines offer a high degree of safety.
- Suitable for integration into a production line.
- All-round protection with a modern Plexiglas hood and doors that open upwards to ensure good accessibility.

Film feed from above
FW550, FW750

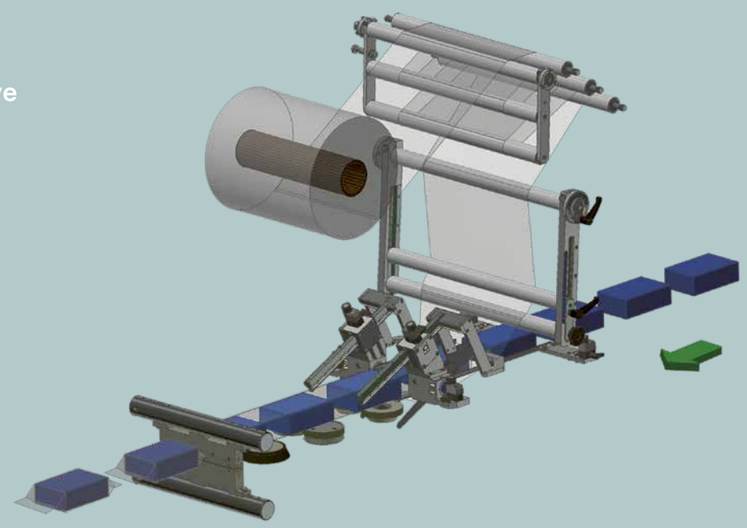

Film feed from below
FW550-LR, FW750-LR

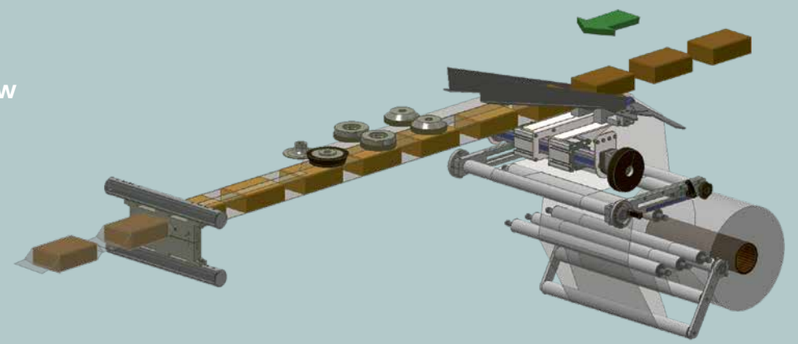

Packaging processes

FW300E

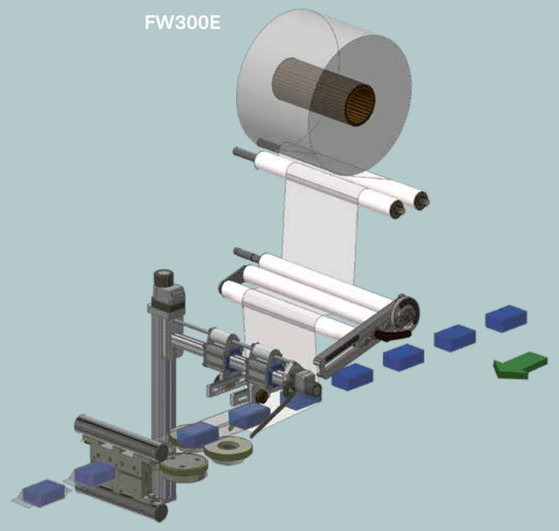

FW400E

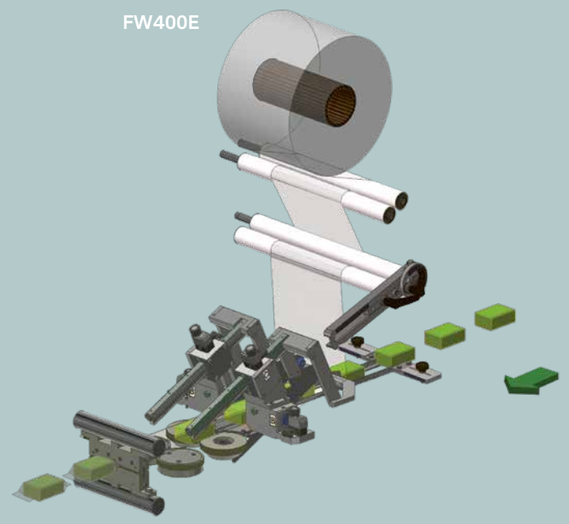

FW500E

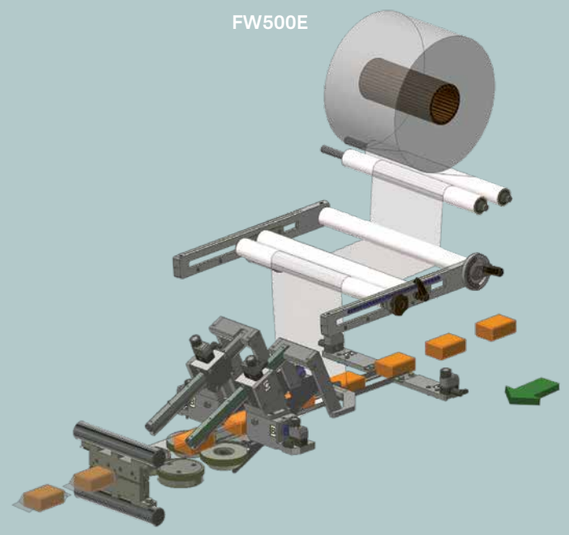

SaroPacker

FW300E
FW400E
FW500E



Film guiding and sealing

- Cross-sealing with rotating jaws
- Longitudinal sealing from 2 pairs of pulling wheels: the first pair pulls the film and the second pair performs the sealing operation
- Opening on the wheels for longitudinal sealing: Manual (FW300E) / pneumatic (FW400E, FW500E)
- Dynamic forming shoulder with numeric position display as standard
- Incl. print mark control for printed films, “No product-no bag” function to avoid empty bags, and final film inspection

Control and safety

- FLXMOD® control, including 7-inch colour touchscreen, user-friendly menu navigation, IN / OUT control modules for digital and analogue inputs/outputs, controlled temperature measurements via temperature sensor
- 50 memory locations for specific procedures are available
- All gliding surfaces that come into contact with products are made of AISI 304 stainless steel
- Compliance with EG standards

Mechanics and operation

- In-feed conveyor belt with adjustable guides and easy to replace pushers
- Film roll holder with a mechanical coupling and mechanical securing (FW300E) or pneumatic expansion shaft (FW400E, FW500E)
- Manual height adjustment of the sealing jaws (centre sealing)
- Motorised and height-adjustable product out-feed conveyor belt
- Collection tray for product residues under the entire length of the in-feed conveyor belt, with easy removal (for easy cleaning)

Technical data, page 18

Video

FW300E

- Up to 80 packages per minute
- Wide sealing jaws: 150 mm
- Maximum product height: 60 mm
- Maximum film width: 300 mm

4.0 ready



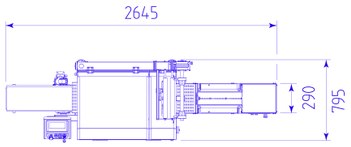

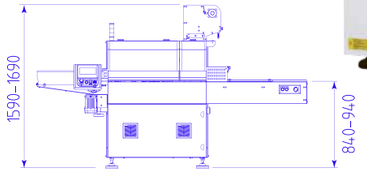

Video

FW400E

- Up to 100 packages per minute
- Wide sealing jaws: 150 mm
- Maximum product height: 80 mm
- Maximum film width: 400 mm

4.0 ready



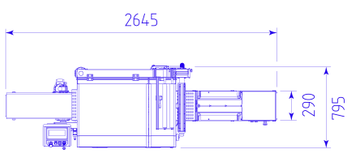

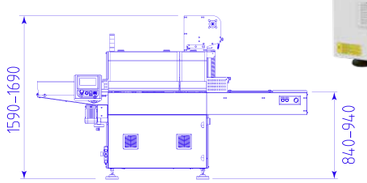

Video

FW500E

- Up to 120 packages per minute
- Wide sealing jaws: 250 mm
- Maximum product height: 100 mm
- Maximum film width: 500 mm

4.0 ready



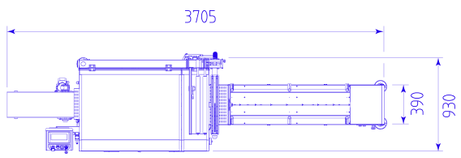

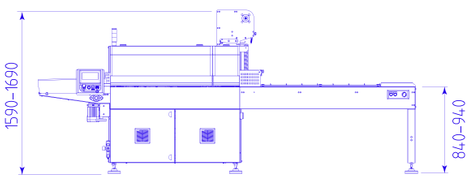

SaroPacker

FW550
FW750
FW550-LR
FW750-LR



Film guiding and sealing

- Cross-sealing with rotating jaws
- Longitudinal sealing from 3 pairs of pulling wheels: the first pair pulls the film, the second pair performs the sealing operation and the third pair pleats the longitudinal seam
- Pneumatic opening on the wheels for longitudinal sealing
- Dynamic forming shoulder with numeric position display as standard
- Incl. print mark control for printed films, “No product-no bag” function to avoid empty bags, and final film inspection

Control and safety

- FLXMOD® control, including 7-inch colour touchscreen, user-friendly menu navigation, IN / OUT control modules for digital and analogue inputs/outputs, controlled temperature measurements via temperature sensor
- 50 memory locations for specific procedures are available
- All gliding surfaces that come into contact with products are made of AISI 304 stainless steel
- Compliance with EG standards

Mechanics and operation

- In-feed conveyor belt, 1500 mm long, with adjustable guides and easy to replace pushers
- Film roll holder with a pneumatic expansion shaft
- Motorised height adjustment of the sealing jaws (centre sealing) can be requested from the program
- Motorised and height-adjustable product out-feed conveyor belt
- Film unrolling device and out-feed conveyor belt driven by independent, frequency-controlled motors
- Collection tray for product residues under the entire length of the in-feed conveyor belt, with easy removal (for easy cleaning)

Technical data, page 18

Video

FW550, FW750

4.0 ready

- Film feed from above
- Up to 100 packages per minute with simple sealing jaws, and up to 200 packages per minute with double sealing jaws
- Wide sealing jaws: 250 mm (FW550), 350 mm (FW750)
- Maximum product height: 120 mm
- Maximum film width: 550 mm (FW550), 750 mm (FW750)



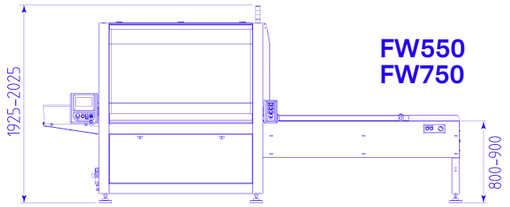

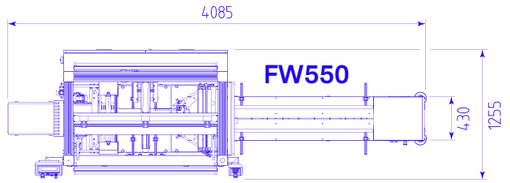

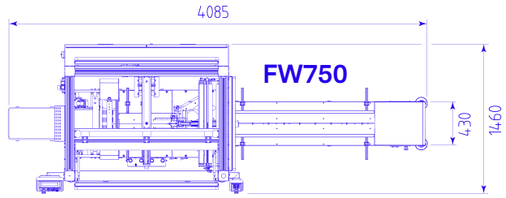

Video

FW550-LR, FW750-LR

4.0 ready

- Film feed from below
- Up to 100 packages per minute
- Wide sealing jaws: 250 mm (FW550-LR), 350 mm (FW750-LR)
- Maximum product height: 120 mm
- Maximum film width: 550 mm (FW550), 750 mm (FW750)



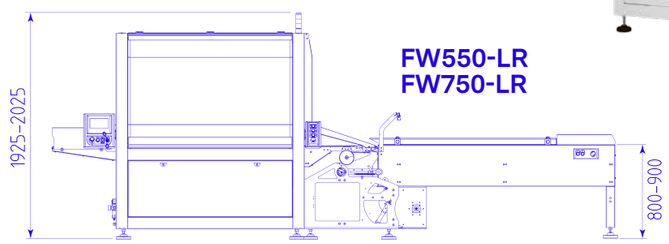

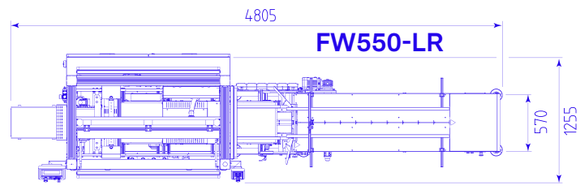

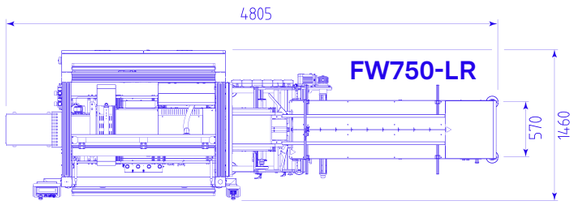

Vertical cycled sealing system

These flow pack machines are equipped with a vertical cross-sealing system controlled by a servo motor. The cycled operation of these machines makes it possible to reliably package a wide range of products.

- The products are packaged at a speed of up to 40 cycles per minute.
- The system for forming and sealing the film bag in combination with the specially developed dynamic forming shoulder enables the fast and flexible set-up of the packaging process.
- The vertical cross-sealing system makes the machines suitable for creating tight packaging with mono films or composite films, with the addition of gas or other preserving agents; ideal for packaging food with a long shelf life or hygiene products.
- The large size range makes it possible to process both small and large-format products and everything in between.
- Suitable for integration into a production line.
- All-round protection with a modern Plexiglas hood and doors that open upwards to ensure good accessibility.

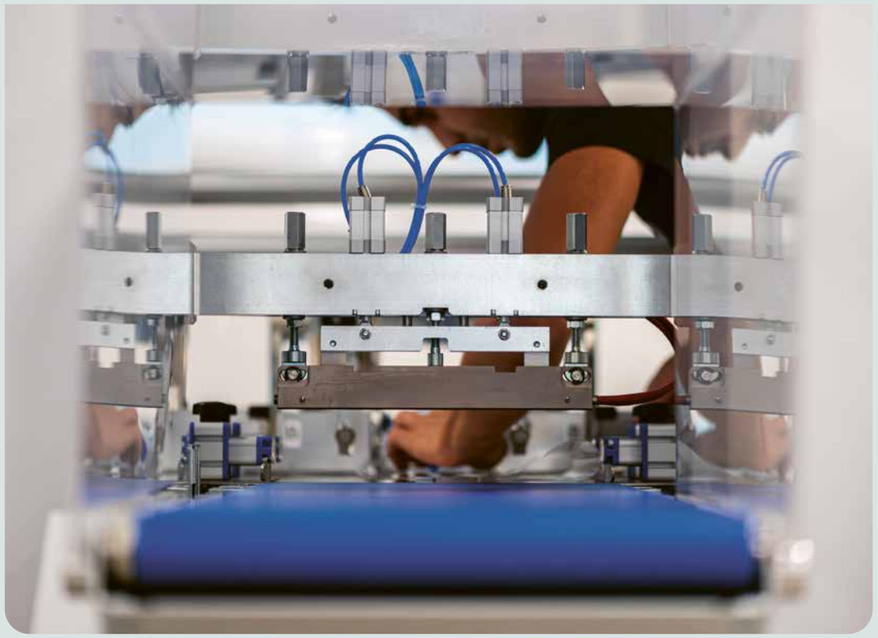

Film feed from above
FW550S, FW750S

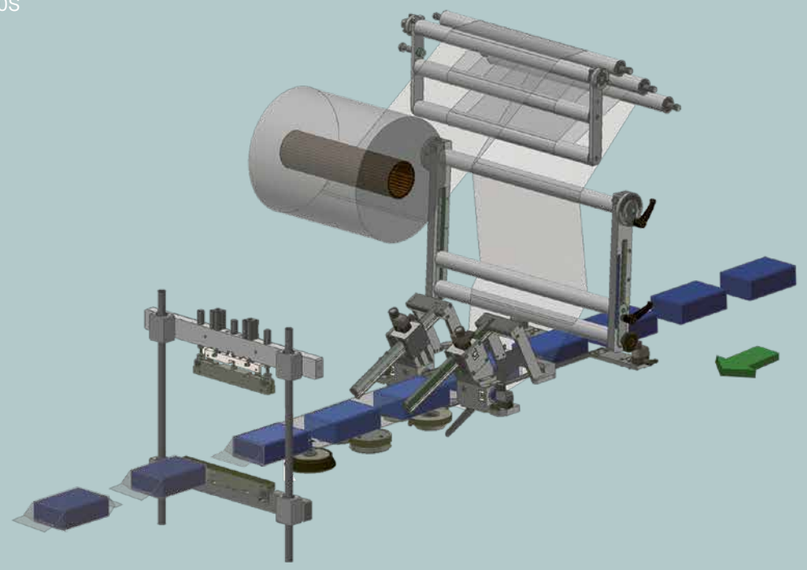

Film feed from below
FW550S-LR, FW750S-LR

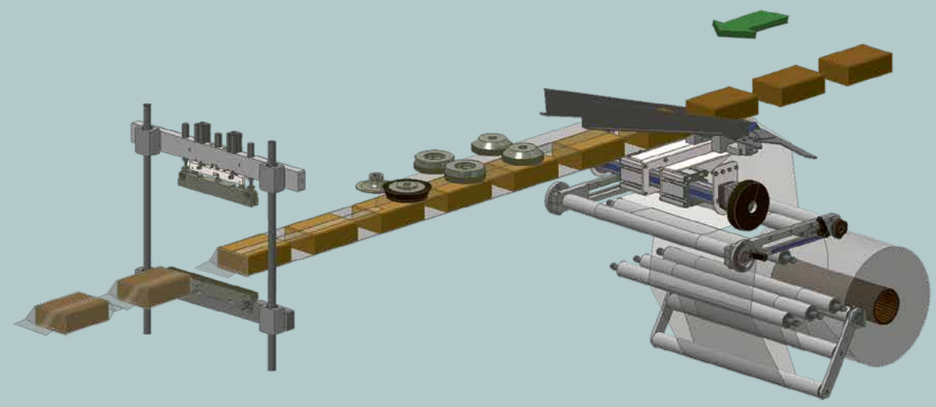

SaroPacker

FW550S
FW750S
FW550S-LR
FW750S-LR



Film guiding and sealing

- Cross-sealing with vertical jaws
- Longitudinal sealing from 3 pairs of pulling wheels: the first pair pulls the film, the second pair performs the sealing operation and the third pair pleats the longitudinal seam
- Pneumatic opening on the wheels for longitudinal sealing
- Dynamic forming shoulder with numeric position display as standard
- Incl. print mark control for printed films, “No product-no bag” function to avoid empty bags, and final film inspection

Control and safety

- FLXMOD® control, including 7-inch colour touchscreen, user-friendly menu navigation, IN / OUT control modules for digital and analogue inputs/outputs, controlled temperature measurements via temperature sensor
- 50 memory locations for specific procedures are available
- In-feed conveyor belt, intermediate conveyor belt, cross and longitudinal sealing and out-feed conveyor belt driven by independent, driver-controlled servo motors
- All gliding surfaces that come into contact with products are made of AISI 304 stainless steel
- Compliance with EG standards

Mechanics and operation

- In-feed conveyor belt, 1500 mm long, with adjustable guides and easy to replace pushers (FW550S, FW750S)
- In-feed conveyor belt, 2000 mm long, with removable transport belt for easy cleaning, and with adjustable guides (FW550S-LR, FW750S-LR)
- Film roll holder with a frequency-controlled motor and a pneumatic expansion shaft
- Motorised height adjustment of the sealing jaws (centre sealing) can be requested from the program
- Motorised and height-adjustable product out-feed conveyor belt
- Film unrolling device and out-feed conveyor belt driven by independent, frequency-controlled motors
- Collection tray for product residues under the entire length of the in-feed conveyor belt, with easy removal (for easy cleaning)

Technical data, page 18

Video

4.0 ready

FW550S, FW750S

- Film feed from above
- Up to 40 packages per minute
- Wide sealing jaws: 250 mm (FW550S), 350 mm (FW750S)
- Maximum product height: 120 mm (FW550S), 200 mm (FW750S)
- Maximum film width: 550 mm (FW550S), 750 mm (FW750S)



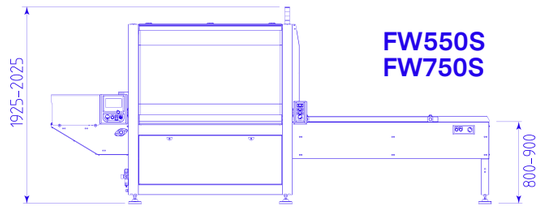

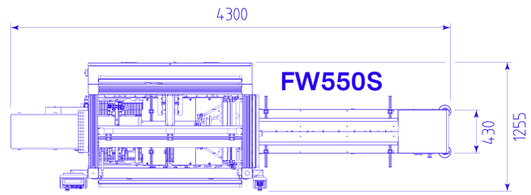

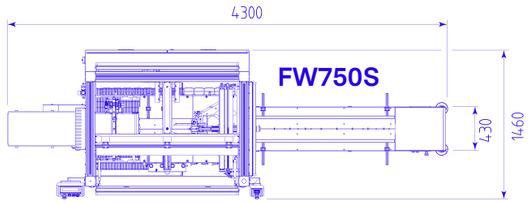

4.0 ready

FW550S-LR, FW750S-LR

- Film feed from below
- Up to 40 packages per minute
- Wide sealing jaws: 250 mm (FW550S-LR), 350 mm (FW750S-LR)
- Maximum product height: 150 mm (FW550S-LR), 200 mm (FW750S-LR)
- Maximum film width: 550 mm (FW550S-LR), 750 mm (FW750S-LR)



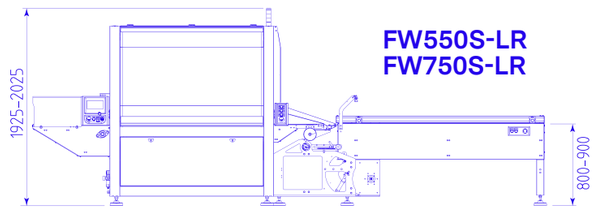

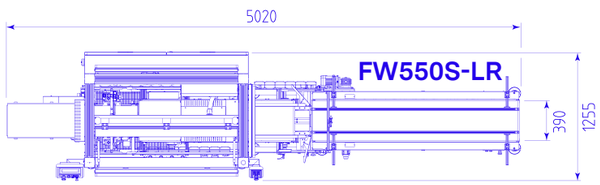

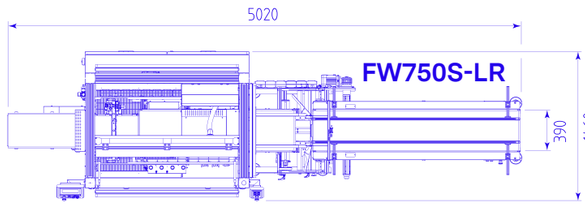

Vertical continuous sealing system

These flow pack machines are equipped with a vertical “Box Motion” cross-sealing system controlled by multiple servo motors. The continuously running sealing jaws enable tight packaging at a high speed, even in connection with difficult and unstable products.

- The products are packaged at a speed of up to 80 cycles per minute in a continuous process.
- The system for forming and sealing the film bag in combination with the specially developed dynamic forming shoulder enables the fast and flexible set-up of the packaging process.
- The vertical cross-sealing system makes the machines suitable for creating tight packaging with mono films or composite films, with the addition of gas or other preserving agents; ideal for packaging food with a long shelf life or hygiene products.
- Continuous operation means the products run through the machine without stopping. The large size range makes it possible to process both small and large-format products and everything in between.
- Suitable for integration into a production line.
- All-round protection with a modern Plexiglas hood and doors that open upwards to ensure good accessibility.



Film feed from above
FW550S SERVO, FW750S SERVO

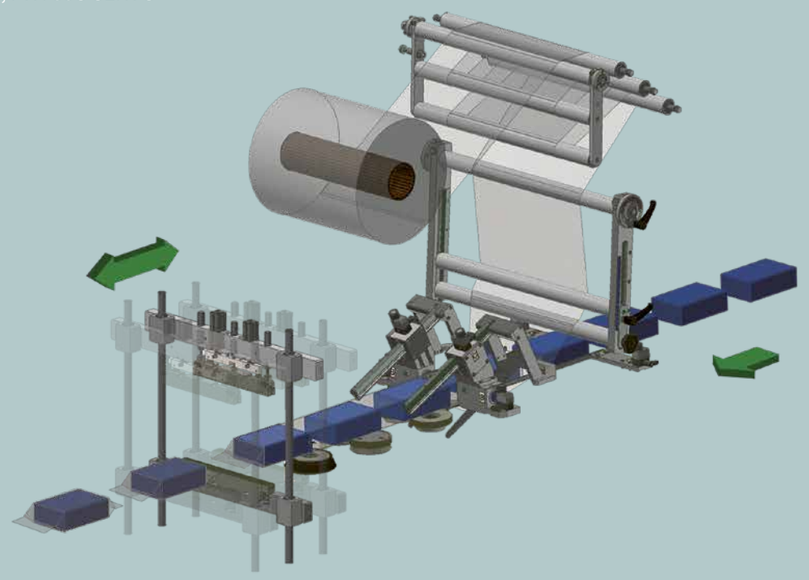

Film feed from below
FW550S-LR SERVO, FW750S-LR SERVO

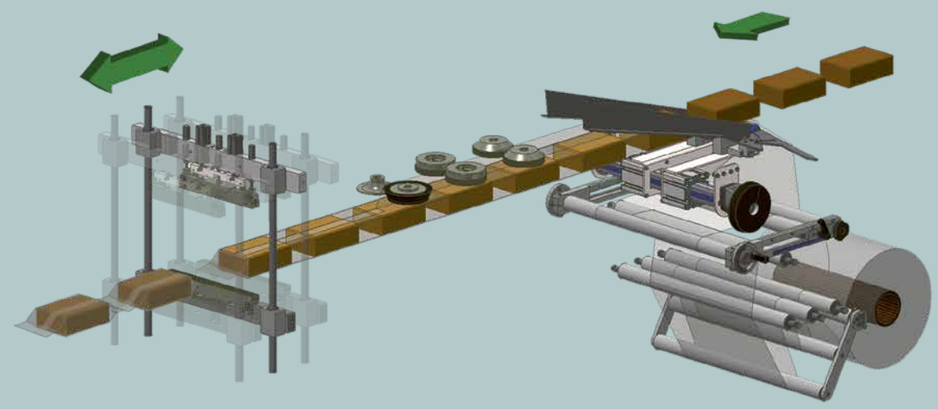

SaroPacker
FW550S SERVO
FW750S SERVO
FW550S-LR SERVO
FW750S-LR SERVO



Film guiding and sealing

- Continuous “Box Motion” cross-sealing with vertical jaws and electronic, self-regulating camshaft
- Longitudinal sealing from 3 pairs of pulling wheels: the first pair pulls the film, the second pair performs the sealing operation and the third pair pleats the longitudinal seam
- Pneumatic opening on the wheels for longitudinal sealing
- Dynamic forming shoulder with numeric position display as standard
- Incl. print mark control for printed films, “No product-no bag” function to avoid empty bags, and final film inspection

Control and safety

- FLXMOD® control, including 7-inch colour touchscreen, user-friendly menu navigation, IN / OUT control modules for digital and analogue inputs/outputs, controlled temperature measurements via temperature sensor
- 50 memory locations for specific procedures are available
- In-feed conveyor belt, cross and longitudinal sealing, pushing movement in the cross-sealing, and out-feed conveyor belt with driver-controlled servo motors
- All gliding surfaces that come into contact with products are made of AISI 304 stainless steel
- Compliance with EG standards

Mechanics and operation

- In-feed conveyor belt, 1500 mm long, with adjustable guides and easy to replace pushers (FW550S SERVO, FW750S SERVO)
- In-feed conveyor belt, 2000 mm long, with removable transport belt for easy cleaning, and with adjustable guides (FW550S-LR SERVO, FW750S-LR SERVO)
- Film roll holder with a frequency-controlled motor and a pneumatic expansion shaft
- Motorised height adjustment of the sealing jaws (centre sealing) can be requested from the program
- Motorised and height-adjustable product out-feed conveyor belt
- Film unrolling device and out-feed conveyor belt driven by independent, frequency-controlled motors
- Collection tray for product residues under the entire length of the in-feed conveyor belt, with easy removal (for easy cleaning)

Technical data, page 18

Video

4.0 ready

FW550S SERVO, FW750S SERVO

- Film feed from above
- Up to 80 packages per minute
- Wide sealing jaws:
  250 mm (FW550S SERVO), 350 mm (FW750S SERVO)
- Maximum product height:
  120 mm (FW550S SERVO), 200 mm (FW750S SERVO)
- Maximum film width:
  550 mm (FW550S SERVO), 750 mm (FW750S SERVO)



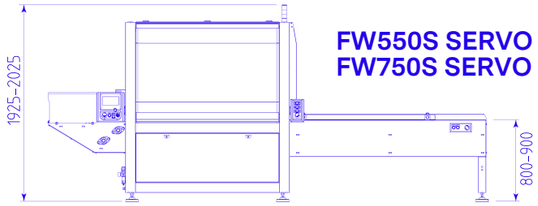

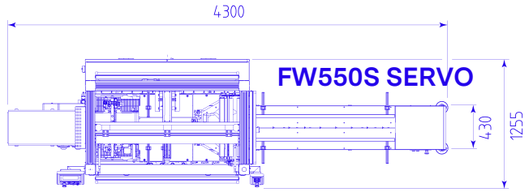

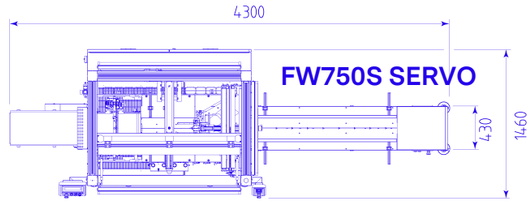

Video

4.0 ready

FW550S-LR SERVO, FW750S-LR SERVO

- Film feed from below
- Up to 80 packages per minute
- Wide sealing jaws:
  250 mm (FW550S-LR SERVO), 350 mm (FW750S-LR SERVO)
- Maximum product height:
  150 mm (FW550S-LR SERVO), 200 mm (FW750S-LR SERVO)
- Maximum film width:
  550 mm (FW550S-LR SERVO), 750 mm (FW750S-LR SERVO)



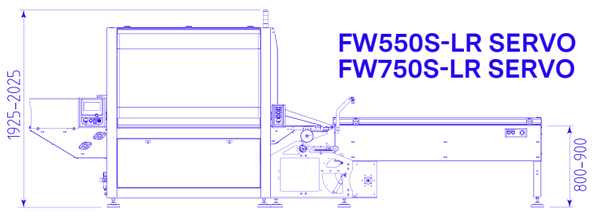

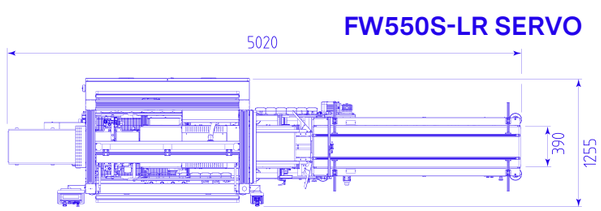

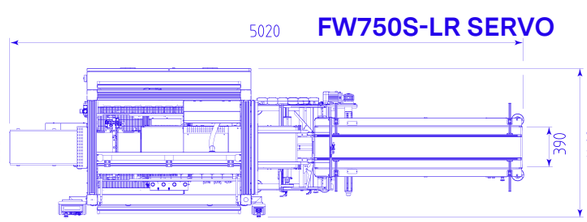

Technical data

	Machine model	Power supply V	Power supply Hz	Power output W	Compressed air bar	Sealing bar mm	Max. product height mm	Production up to ppm*	Max. thickness of film roll mm	Machine dimensions mm	Machine net weight kg
Rotating sealing system	**FW300E ◊**	220 / 240 1PH+N+PE	50 / 60	2650	–	150	60	80	300 – ø 300	2645 x 795 h 1590 – 1690	330
	FW400E ◊	220 / 240 1PH+N+PE	50 / 60	2650	6	150	80	100	400 – ø 300	2645 x 795 h 1590 – 1690	330
	FW500E ◊	220 / 240 1PH+N+PE	50 / 60	2650	6	250	100	120	500 – ø 300	3705 x 930 h 1590 – 1690	440
	FW550	380 / 415 3PH+N+PE 220 / 240 3PH+PE	50 / 60	4800	6	250	120	100 ** / 200 ***	550 – ø 350	4085 x 1255 h 1925 – 2025	745
	FW750	380 / 415 3PH+N+PE 220 / 240 3PH+PE	50 / 60	4800	6	350	120	100 ** / 200 ***	750 – ø 350	4085 x 1460 h 1925 – 2025	765
	FW550-LR	380 / 415 3PH+N+PE 220 / 240 3PH+PE	50 / 60	5900	6	250	120	100	550 – ø 350	4805 x 1255 h 1925 – 2025	815
	FW750-LR	380 / 415 3PH+N+PE 220 / 240 3PH+PE	50 / 60	5900	6	350	120	100	750 – ø 350	4805 x 1460 h 1925 – 2025	835
Vertical cycled sealing system	**FW550S**	380 / 415 3PH+N+PE 220 / 240 3PH+PE	50 / 60	5300	6	250	120	40	550 – ø 350	4300 x 1255 h 1925 – 2025	775
	FW750S	380 / 415 3PH+N+PE 220 / 240 3PH+PE	50 / 60	5300	6	350	200	40	750 – ø 350	4300 x 1460 h 1925 – 2025	795
	FW550S-LR	380 / 415 3PH+N+PE 220 / 240 3PH+PE	50 / 60	6400	6	250	150	40	550 – ø 350	5020 x 1255 h 1925 – 2025	845
	FW750S-LR	380 / 415 3PH+N+PE 220 / 240 3PH+PE	50 / 60	6400	6	350	200	40	750 – ø 350	5020 x 1460 h 1925 – 2025	865
Vertical continuous sealing system	**FW550S SERVO**	380 / 415 3PH+N+PE 220 / 240 3PH+PE	50 / 60	7100	6	250	120	80	550 – ø 350	4300 x 1255 h 1925 – 2025	825
	FW750S SERVO	380 / 415 3PH+N+PE 220 / 240 3PH+PE	50 / 60	7100	6	350	200	80	750 – ø 350	4300 x 1460 h 1925 – 2025	845
	FW550S-LR SERVO	380 / 415 3PH+N+PE 220 / 240 3PH+PE	50 / 60	8200	6	250	150	80	550 – ø 350	5020 x 1255 h 1925 – 2025	895
	FW750S-LR SERVO	380 / 415 3PH+N+PE 220 / 240 3PH+PE	50 / 60	8200	6	350	200	80	750 – ø 350	5020 x 1460 h 1925 – 2025	915

* ppm (products per minute) – the speed shown in each case can vary depending on product size/thickness, package format and type of film used.
** With only one cross sealing bar
*** With two cross sealing bars
◊ All models are generally available in an Inox version on request

The information shown here is subject to change without prior notice.
The available accessories are specified in the price list.

Our promise to you

Quality is created through commitment, appreciation and attentiveness. Our quality management starts with our internal processes and how we treat our employees. Our approach here creates trust and forms the foundation for our products. and our solid company that is geared towards the future.

We have integrated management systems:

Our production facilities guarantee security for packaging involving food applications

Global quality at the highest level

Certification of sustainability

The recycling cycle

Post-industrial recycling

Material made from the reuse of clean waste from in-house production. This produces food-compli-ant SaroLon films.

Post-consumer recycling

Mixed waste from consumers, i.e. households, commercial or industrial organisations. E.g. from the yellow bag (Gelber Sack). Advanced recycling (pyrolysis process) produces clean, food-com-pliant SaroLon films again. Proven in the mass balance method, monitored by ISCC auditing.

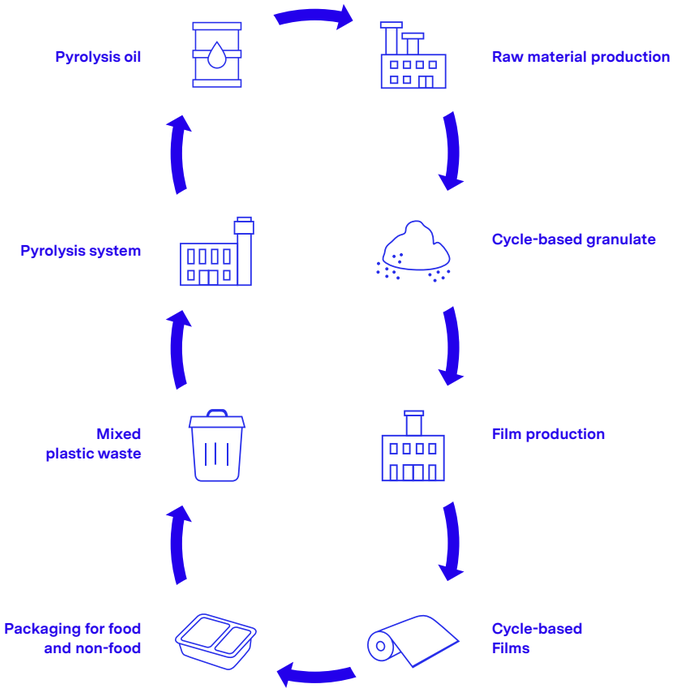

Printed on Lessebo 1.3 Rough Bright, 170 gm²
certified according to Cradle to Cradle Certified® Gold

SaroGreen – future-packed solutions

We make packaging fit for the future: SaroGreen is our formula for success when it comes to the innovative film packaging of tomorrow. It is recyclable and efficient, and it conserves resources. We work together and take responsibility – for a better world.

SARO GREEN



01

Our films are recyclable
Recycling is effective climate protection. It all starts with product design. The raw materials we use are fully recyclable.

02

Our films are only as thick as necessary
We get the best out of every packaging material. Thinner but more stable is the solution. For maximum reliability. For maxi-mum food freshness. Nothing more and nothing less. The environment and your consumers say thank you!

03

Our films are made from renewable raw materials
With our films, you can reconcile cost effectiveness and sustainability and commit to innovative plastics made from renewable or recycled raw materials.

04

Our films are CO2-balanced
Offset your calculated CO2 impact in specific climate protection projects. We support myclimate with certified projects in Switzerland, Germany and Austria.

Saropack expertise
All 4 One

As a packaging specialist, we offer comprehensive and worry-free service. “All 4 One”. The right technology, the right film. Future-proofed, of course. Packed with expertise and service quality from a professional.

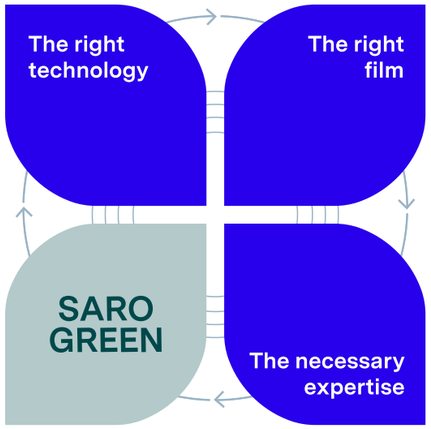

The right technology

We focus on your goals. Together we will find the packaging machine that will make your strategy for success unbeatable. How and where can we help you?

The right film

We are introducing new technologies to the market and offer the widest range of packaging films. Film material, precisely tailored to your applications. High availability and fast logistics are core competences.

The necessary expertise

Film packaging is something that requires knowledge and expertise: our team of specialists will advise and assist you with defining and optimising solutions. Let’s talk about efficiency and productivity.

Your solution for the future

With SaroGreen you can reconcile cost effectiveness and sustainability. Work with us to develop a solid and reliable sustainability concept for your film packaging.

Advice and service
In your region

Fast responses and short distances – fair and uncomplicated service and advice. Service quality means a lot to us, which is why we focus on a regional presence. Our service technicians get where they need to go quickly and without any complications.



Saropack Group headquarters in Rorschach on Lake Constance, Switzerland

All the threads come together at the headquarters. Customer service, project management, purchasing, technology and management work closely together. Competent and environmentally friendly action with adherence to deadlines and high customer orientation are our standards.



Asperg, Ludwigsburg district, Germany

This is where our versatile films are manufactured. Cutting, perforating and printing for customers across Europe are our main areas of expertise. The site has a modern production and logistics infrastructure for maximum customer flexibility.



future-packed solutions

Notes

Advice makes your solution perfect
Get in touch

Edition 2025

Switzerland

Saropack AG
Seebleichestrasse 50
CH–9404 Rorschacherberg
T +41 71 858 38 38
saropack@saropack.ch

saropack.eu

Austria

Saropack Handels GmbH
Vorarlberger Wirtschaftspark 2
A–6840 Götzis
T +43 552 353 540
saropack@saropack.at

Germany

Saropack GmbH
Wallbrunnstrasse 24
D–79539 Lörrach
T +49 762 116 986 80
saropack@saropack.de

myclimate
Engaged for Impact
Company
myclimate.org/01-24-750456

SARO GREEN